REVISIONS					
SYM	E.O.'S	DESCRIPTION	DRWN	APP'D	
A		RELEASES S.O. N&I	RB		
B		RELEASES STOP ORDER 1A	RB		

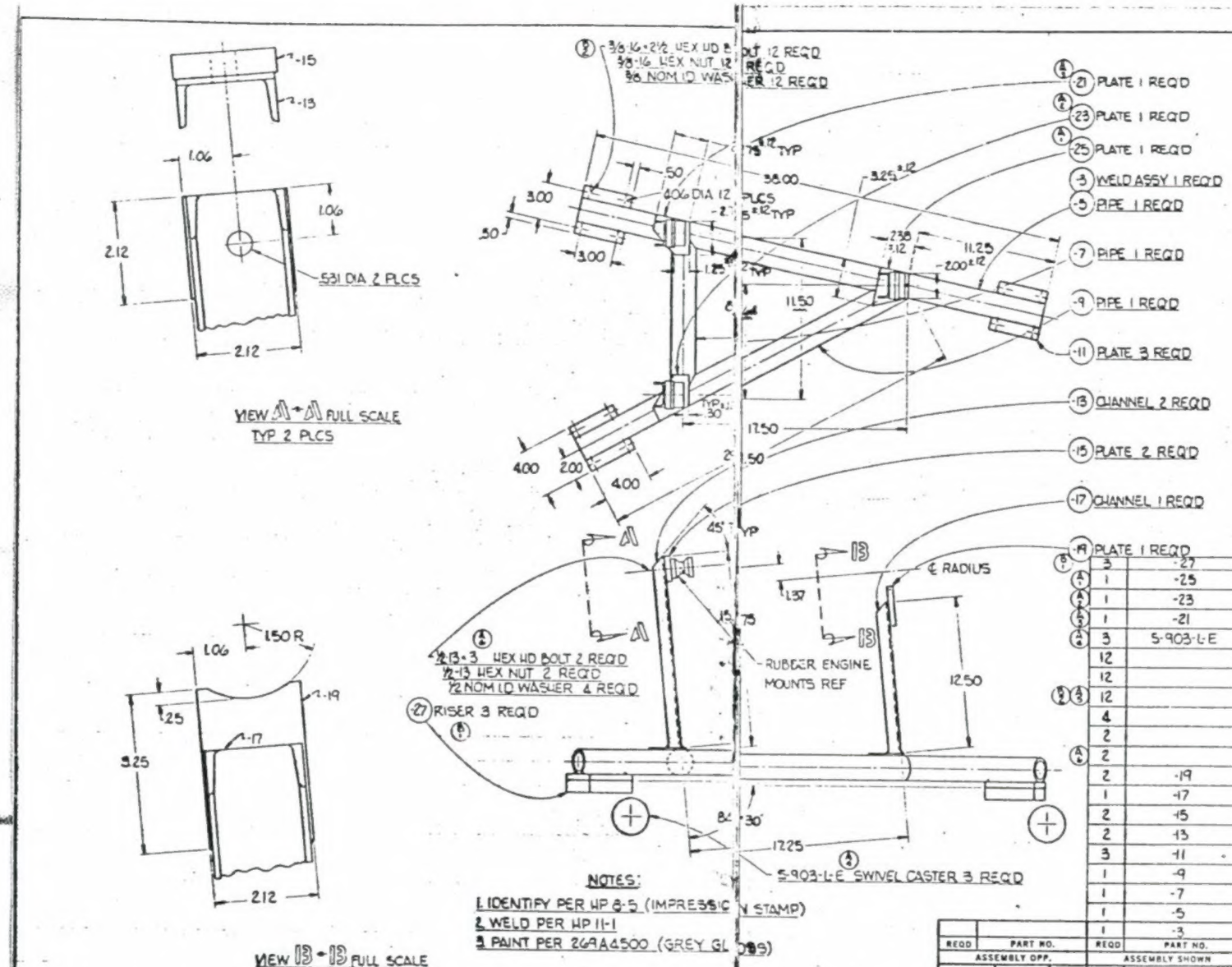

NOTES:

1. IDENTIFY PER HP 8-5 (IMPRESSION STAMP)
2. WELD PER HP 11-1
3. PAINT PER 269A4500 (GREY GLOSS)

REDUCED SIZE PRINT

REQD	PART NO.	REQD	PART NO.	NAME	SIZE	DESCRIPTION	SPECIFICATION
		3	-27	RISER	1 × 4 × 4	MAG TOOL PLATE	
		1	-25	PLATE	3/16 × 3 × 3 1/2	C1018 STL	COMMERCIAL
		1	-23	PLATE	3/16 × 3 × 4		
		1	-21	PLATE	3/16 × 3 × 4	C1018 STL	COMMERCIAL
		3	S-903-L-E	CASTER		SWIVEL	HAMILTON
		12		WASHER	3/8 NOM ID	FLAT, STL	COMMERCIAL
		12		NUT	3/8-16	HEX, STL	
		12		BOLT	3/8-16 × 2 1/2	HEX HD, STL	269A928
		4		WASHER	1/2 NOM ID	FLAT, STL	
		2		NUT	1/2-13	HEX, STL	
		2		BOLT	1/2-13 × 3	HEX HD, STL	
		2	-19	PLATE	1/2 × 2 1/8 × 3 1/4	C1018 STL	
		1	-17	CHANNEL	2 × 1 × 1/8 × 12 1/2	M1015 STL	
		2	-15	PLATE	1/2 × 2 1/8 × 2 1/8	C1018 STL	
		2	-13	CHANNEL	2 × 1 × 1/8 × 16 1/4	M1015 STL	
		3	-11	PLATE	1/2 × 4 × 4	C1018 STL	
		1	-9	PIPE	2 OD × .049 × 29 1/2	SHELBY TUBE	
		1	-7	PIPE	2 OD × .049 × 11 1/2	SHELBY TUBE	
		1	-5	PIPE	2 OD × .049 × 38	SHELBY TUBE	COMMERCIAL
		1	-3	WELD ASSY		-5 THRU -17 & -21 THRU -25	

ASSEMBLY OPP. — ASSEMBLY SHOWN — LIST OF MATERIAL

NEXT ASSY	USED ON	NEXT ASSY	FINAL ASSY
APPLICATION		QTY REQD	

UNLESS OTHERWISE SPECIFIED
DIMENSIONAL TOLERANCES
3 PLACE DECIMAL ± .010
2 PLACE DECIMAL ± .03
ANGULAR ± 0°30'
DIMENSIONS TO BE MET BEFORE PLATING
CORNER RADIUS .062 ON 0° BOXES AND SPOT FACES OF 1.250 DIA. OR LESS — .093 RADIUS ON GREATER THAN 1.250 DIA.

DRWN BENEFIELD
CHK'D
APP'D
APP'D
APP'D
APP'D
APP'D
APP'D

CRADLE-ENGINE

SCALE 1/4 & NTD

HUGHES TOOL COMPANY
AIRCRAFT DIVISION
CULVER CITY, CALIFORNIA

269A9287

CODE 02731 SHEET 1 OF

RIT

SHOP COPY